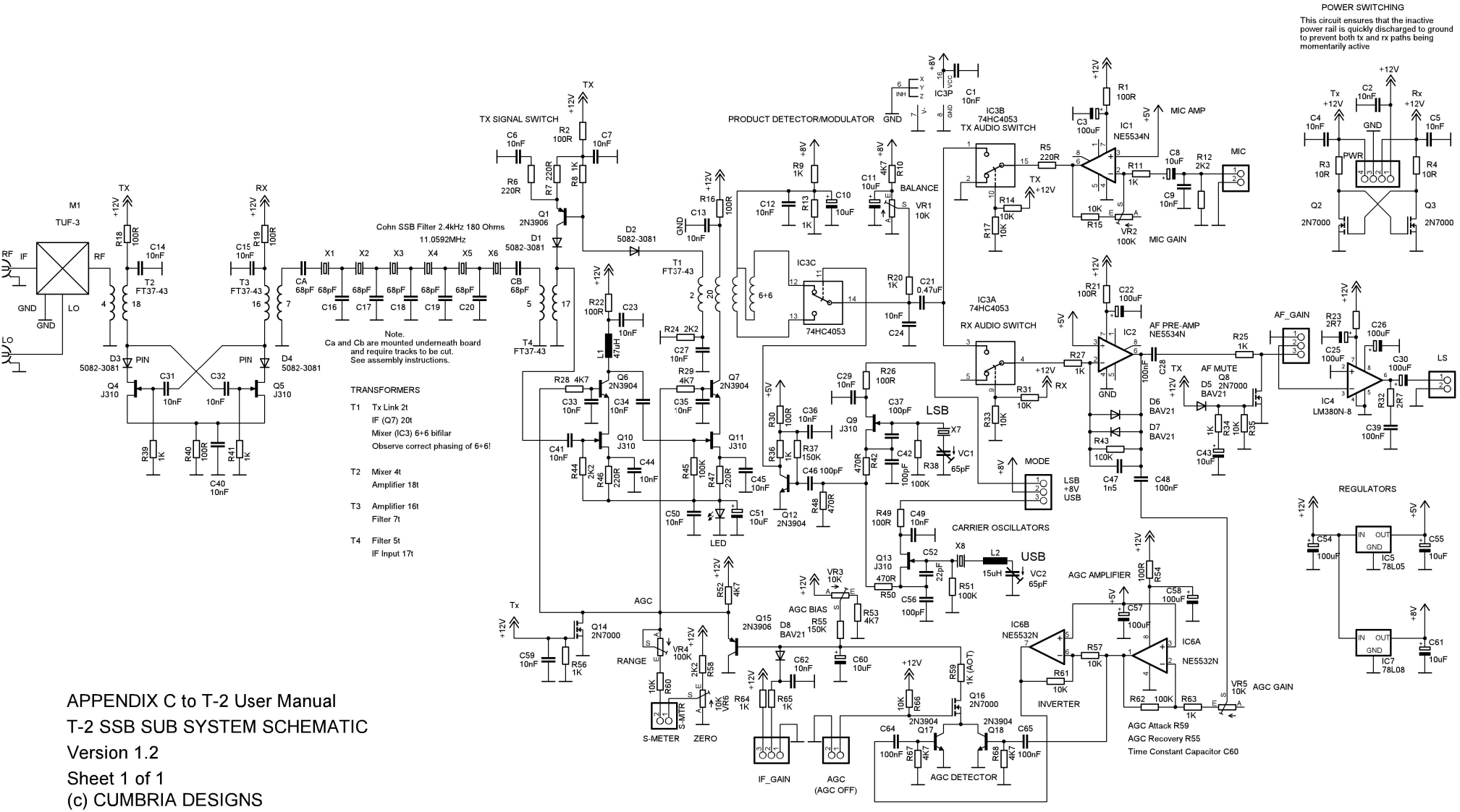

APPENDIX C to T-2 User Manual

T-2 SSB SUB SYSTEM SCHEMATIC

Version 1.2

Sheet 1 of 1

(c) CUMBRIA DESIGNS